Hilux

Hood Deflector

Installation Instructions

Model year:	As from 2020/05
Vehicle code:	GUN125*-****XW* GUN135*-****XW* GUN126*-****XW
Part number:	PZQ15-89350

Manual reference number: AIM 005 042-1

Latest Version
SCAN HERE

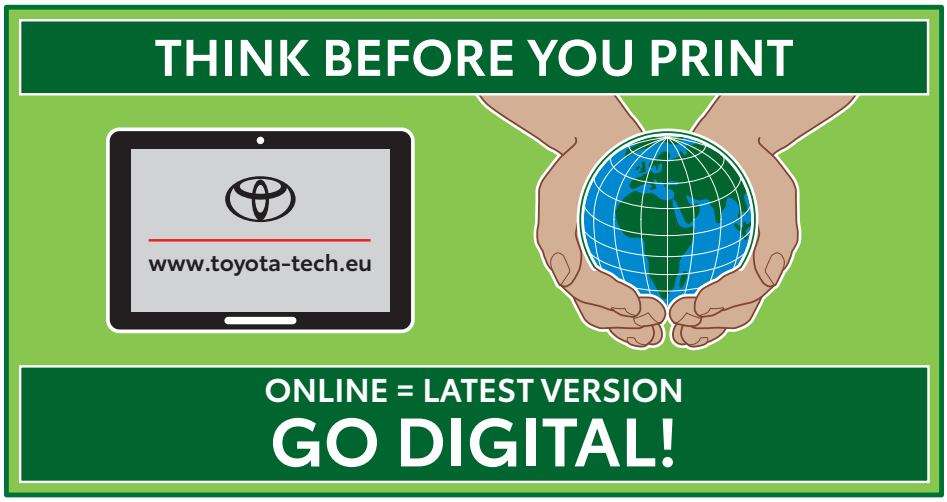

Revision Record

Rev. No.	Date	Page	Step	Remarks
1	06.02.24	All		Updated to latest standards

KIT CONTENT

PZQ15-89350

CHECK SHEET

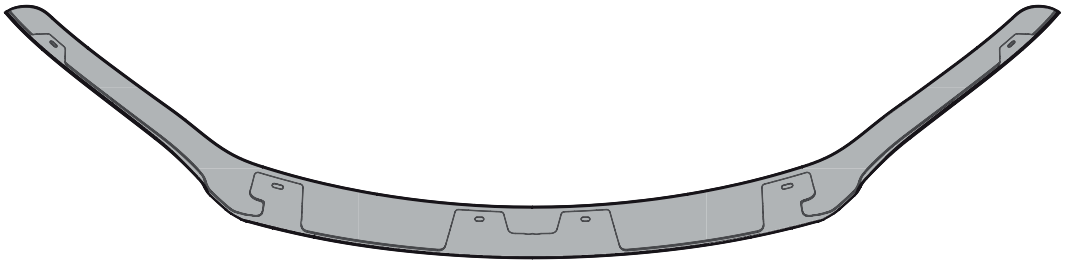

A — 1x

PZQ15-4213A

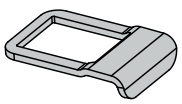

B — 4x

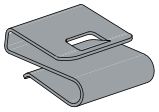

C — 2x



D — 4x



E — 4x



F — 4x



G — 4x

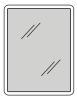

H — 2x

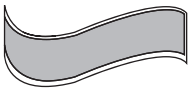

J — 2x



K — 1x

TOOLS

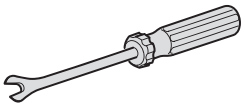

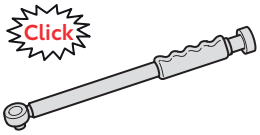

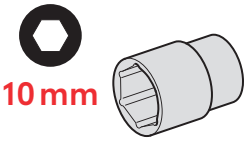

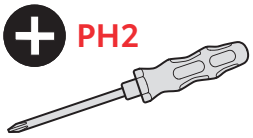

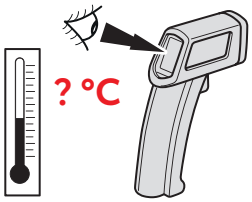

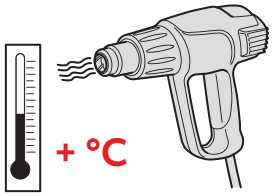

CONSUMABLES

CLEANER / DEGREASER



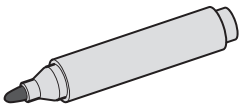

USEFUL GENERAL MANUALS

SYMBOLS

Latest Version
SCAN HERE



CLEANER / DEGREASER

Latest Version
SCAN HERE

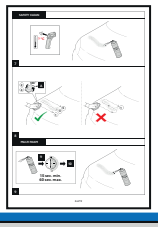

INSTALLATION CONDITIONS

Latest Version
SCAN HERE

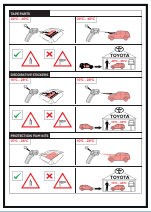

GENERAL

Info



GENERAL

Info

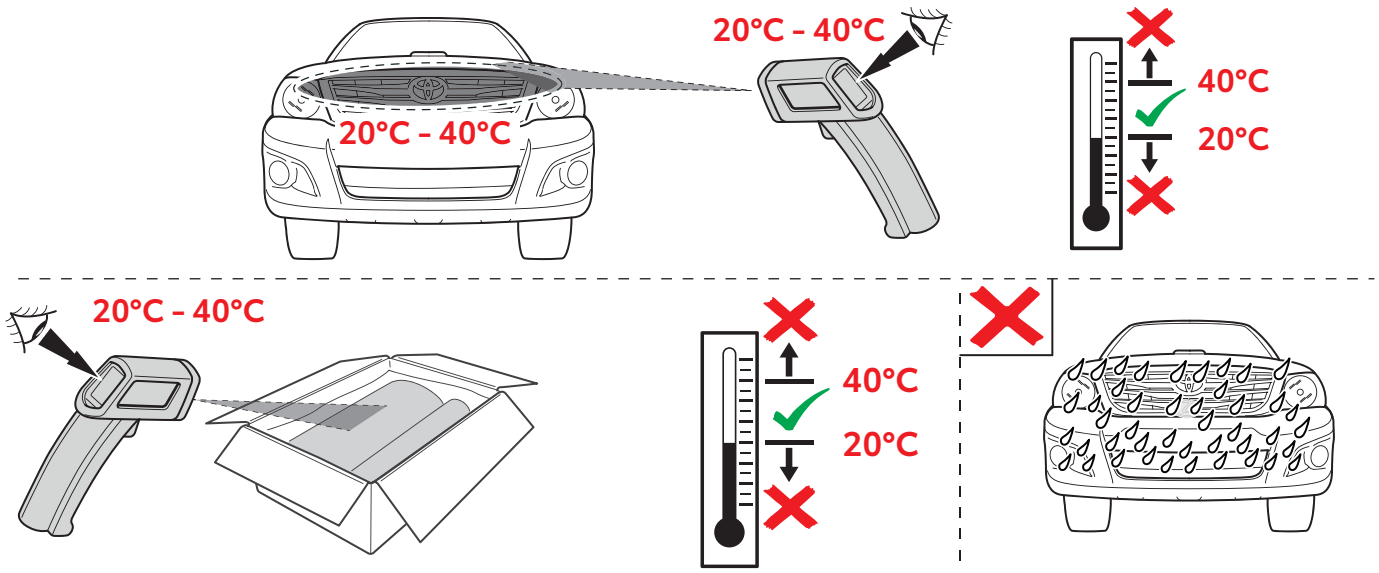

GENERAL

Info

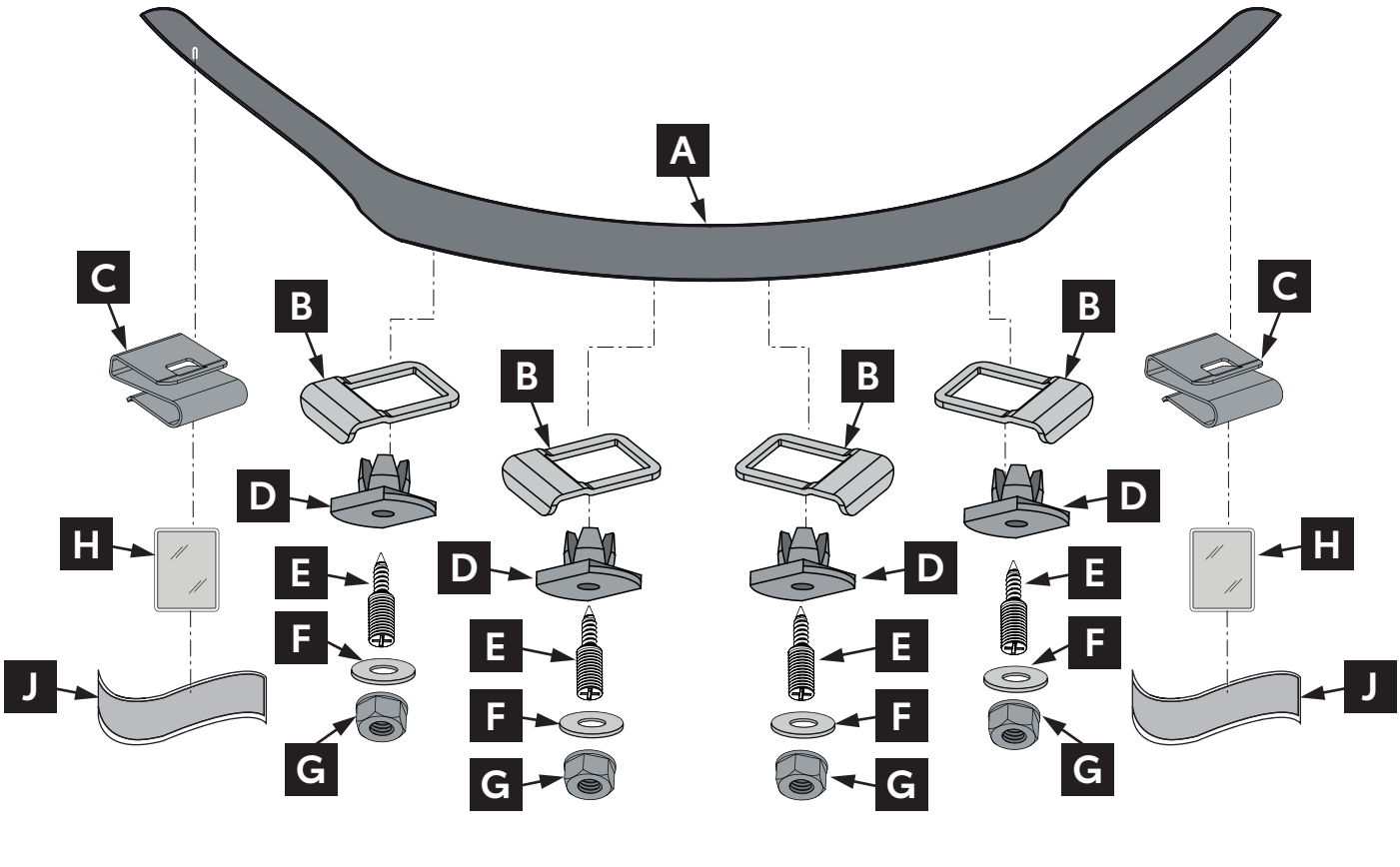

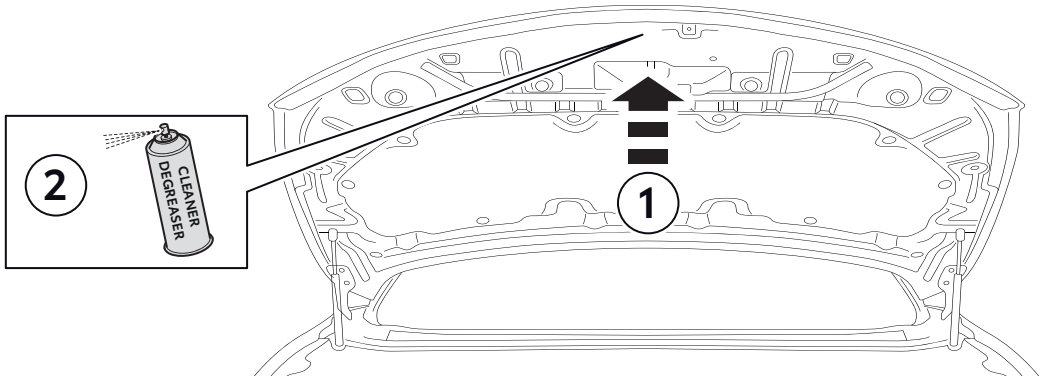

1

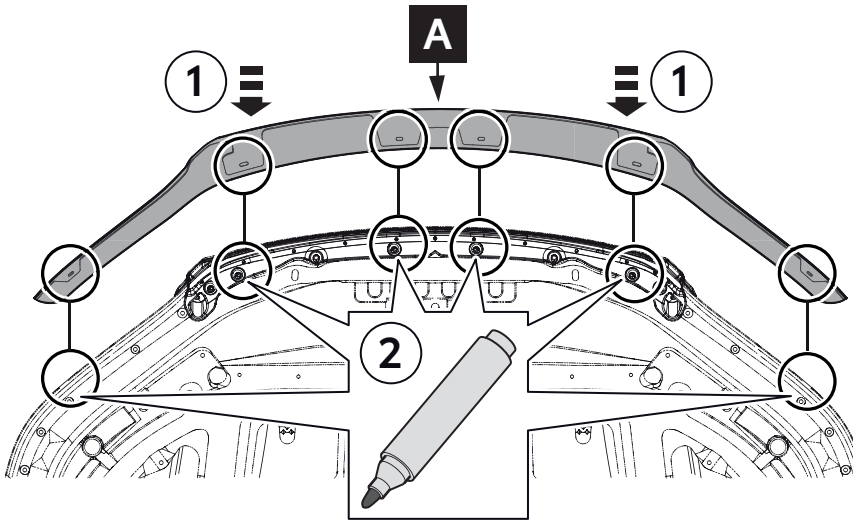

2

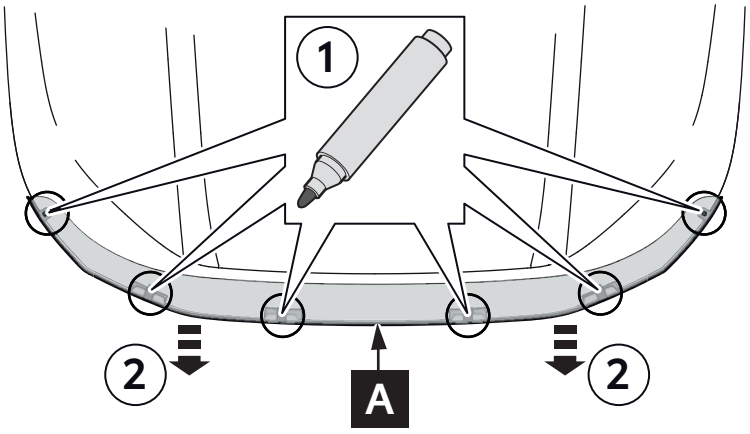

3

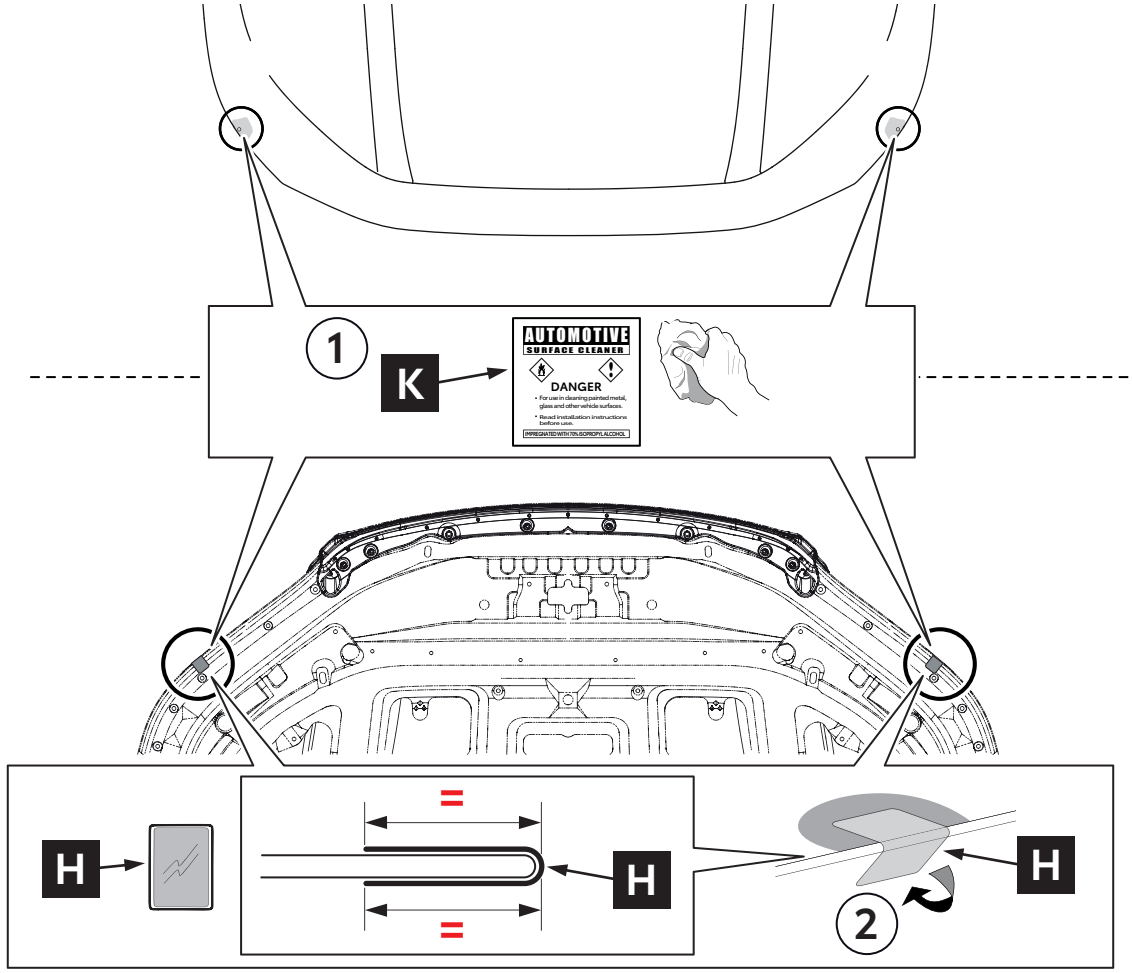

4

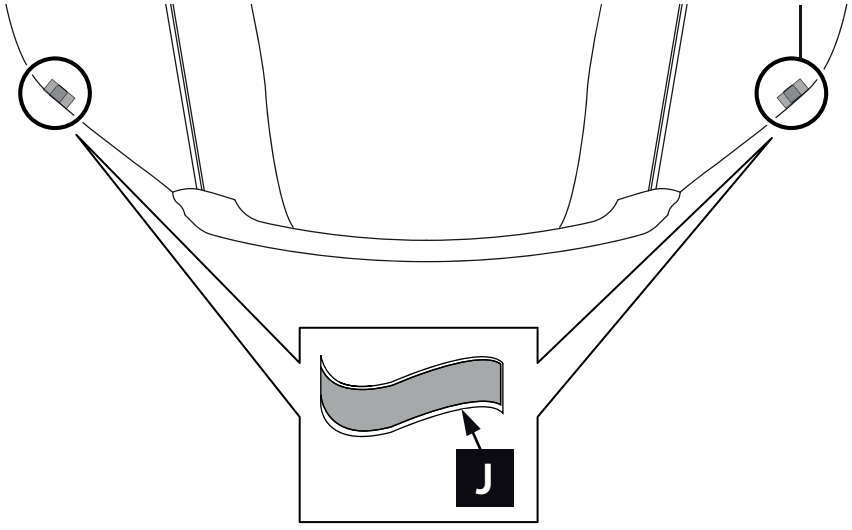

5

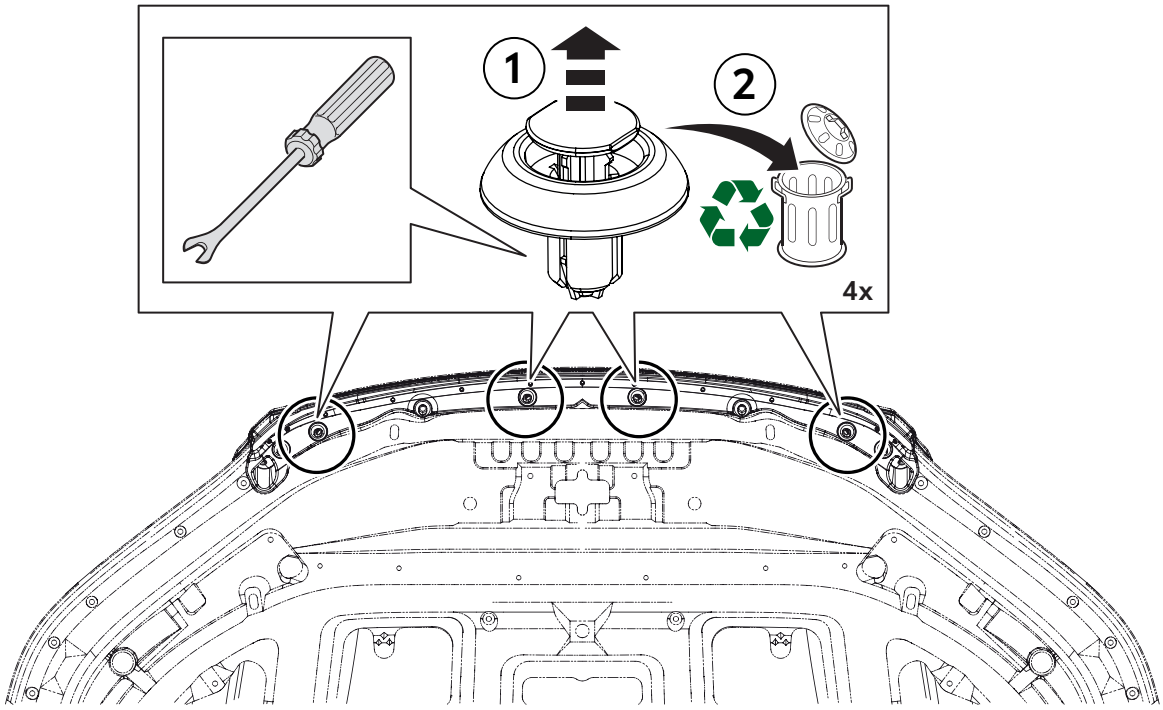

6

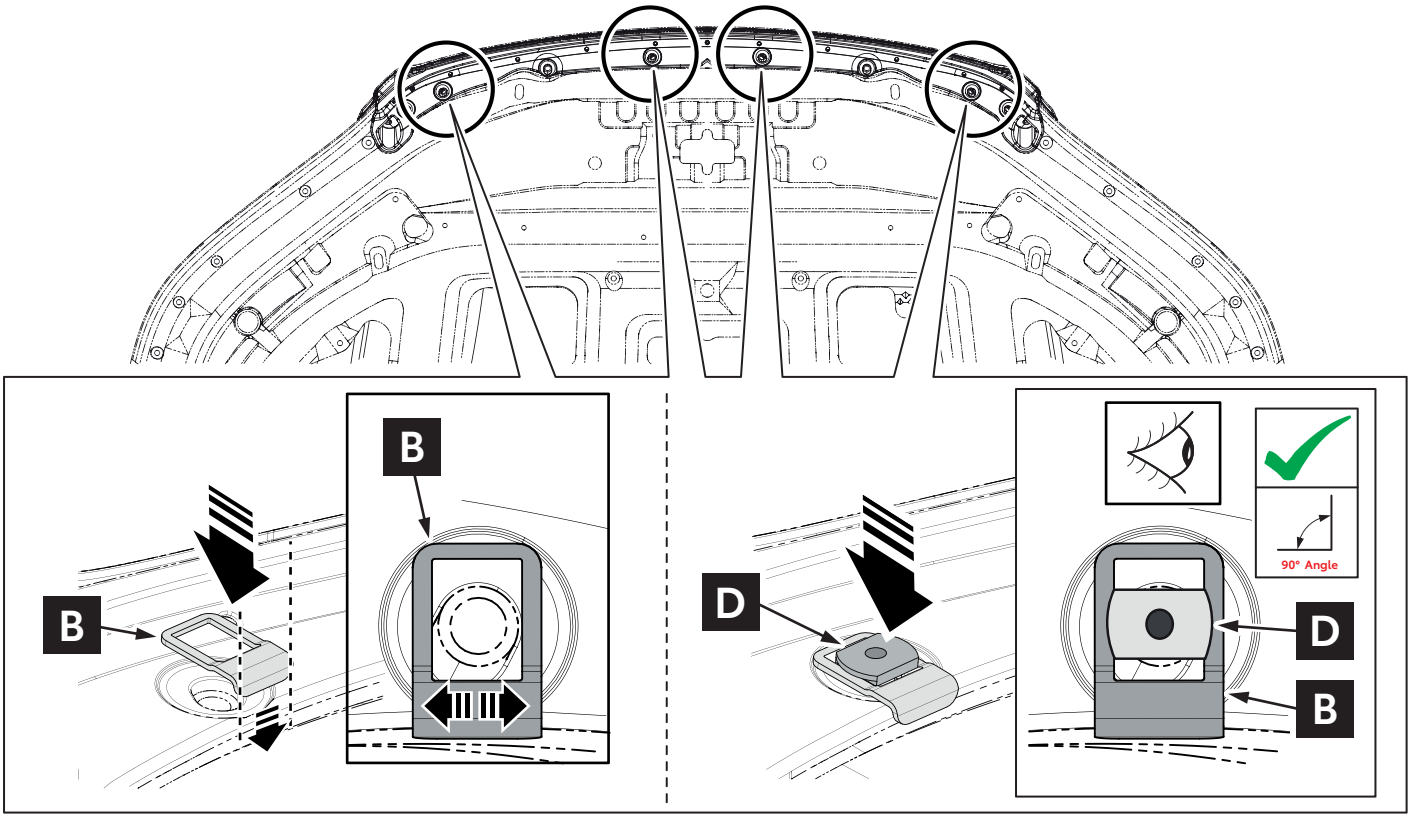

7

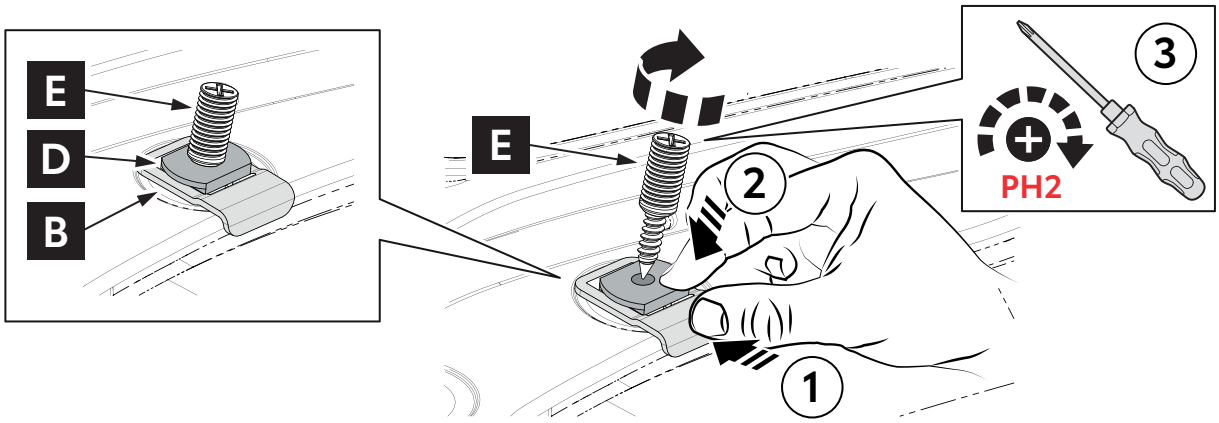

8

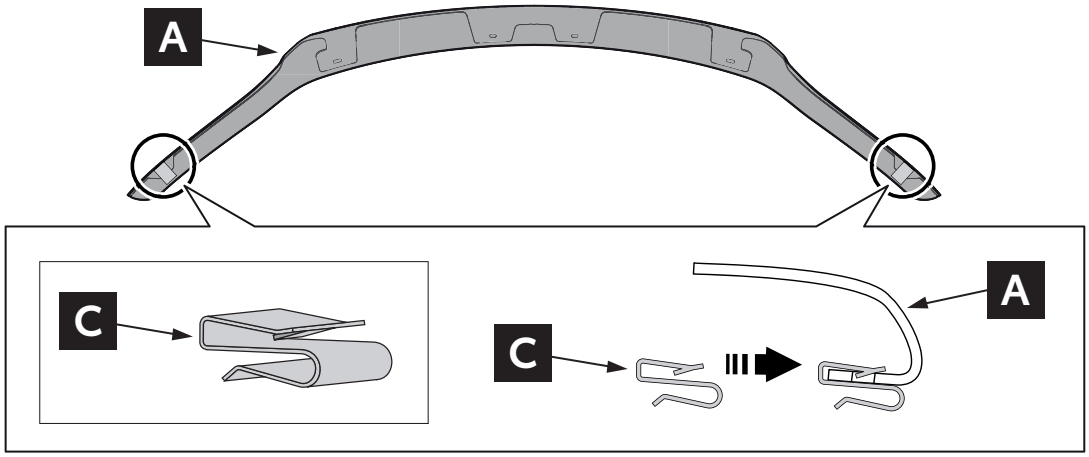

9

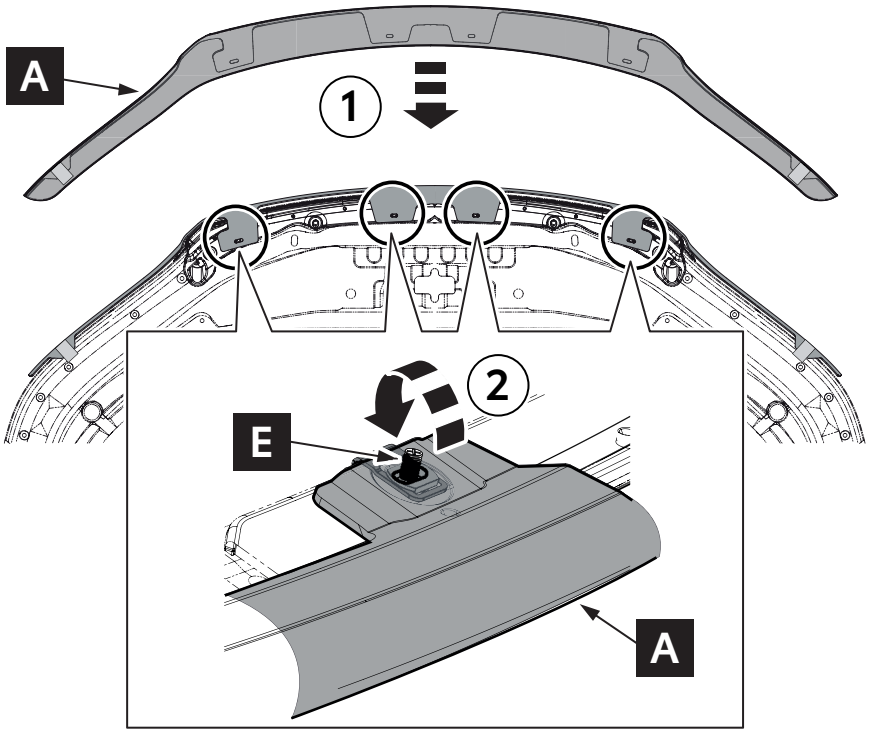

10



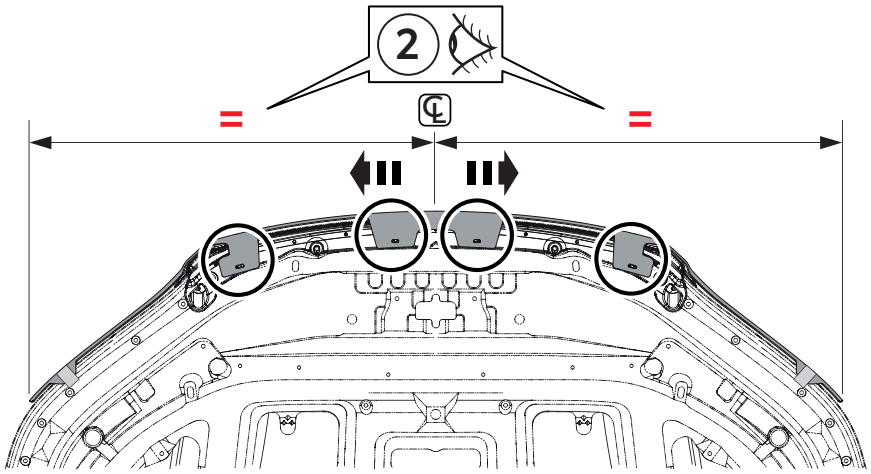

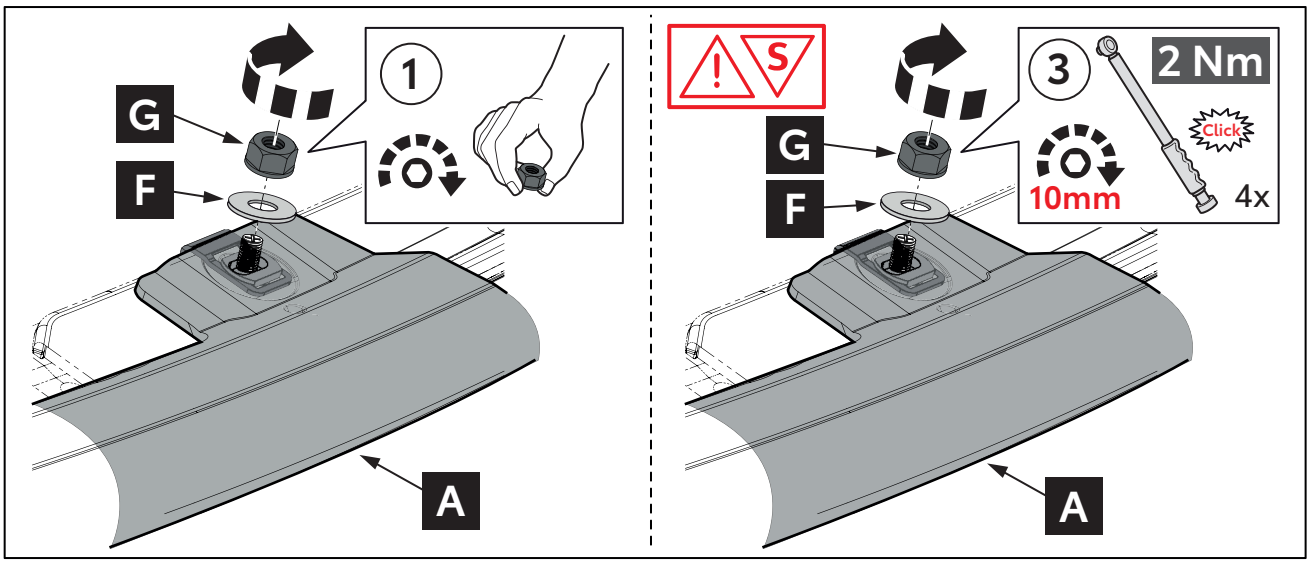

11

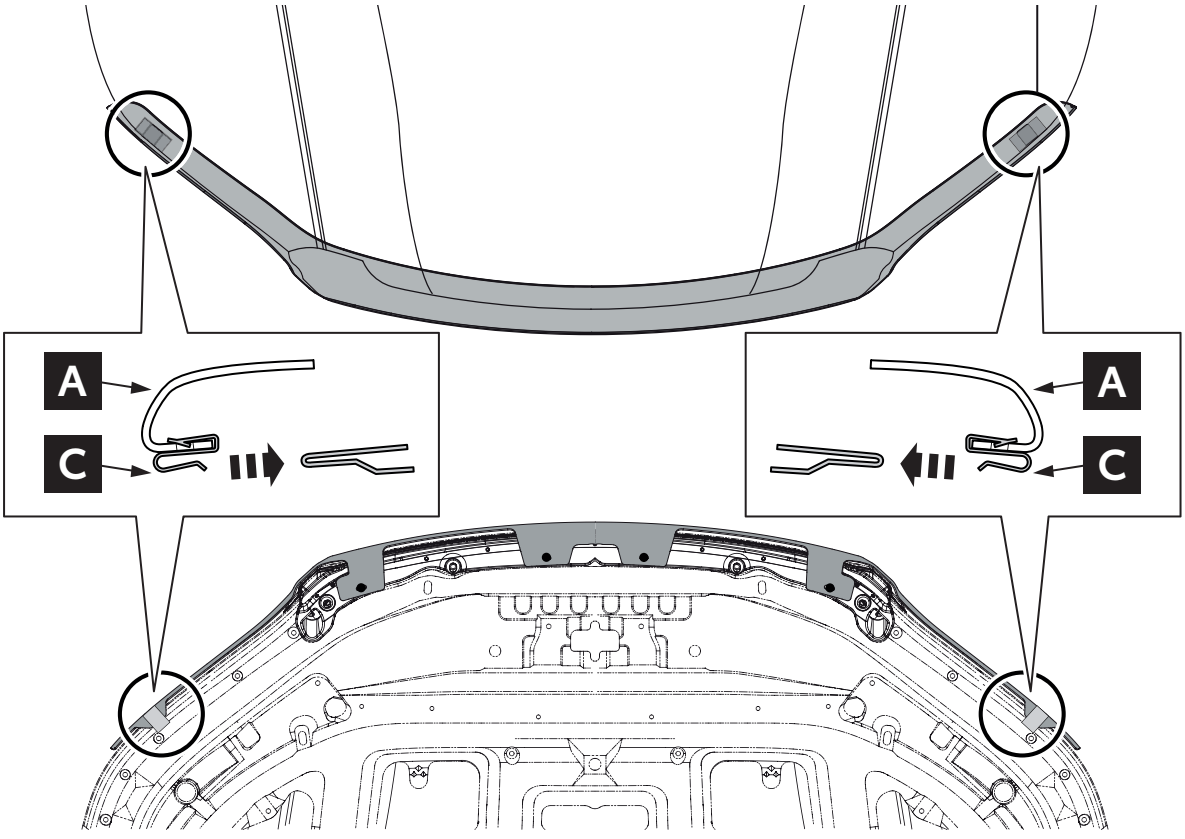

12

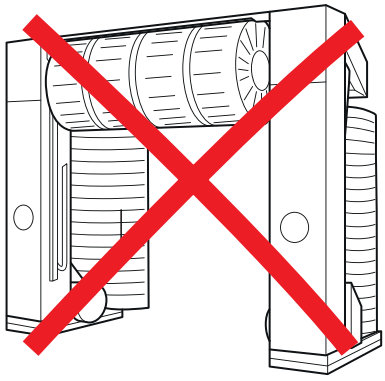


24 h

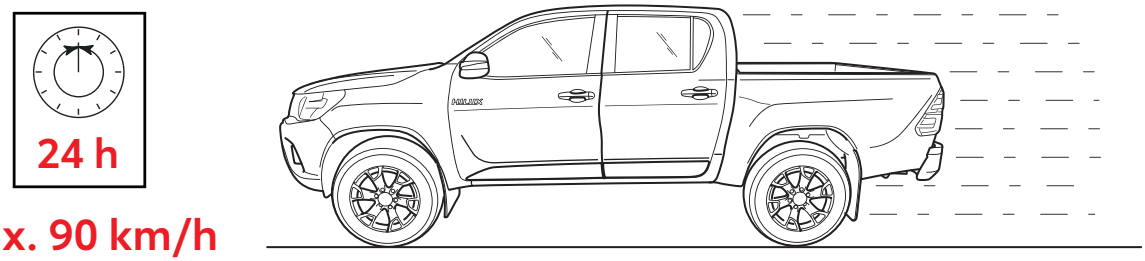
24 h
Max. 90 km/h

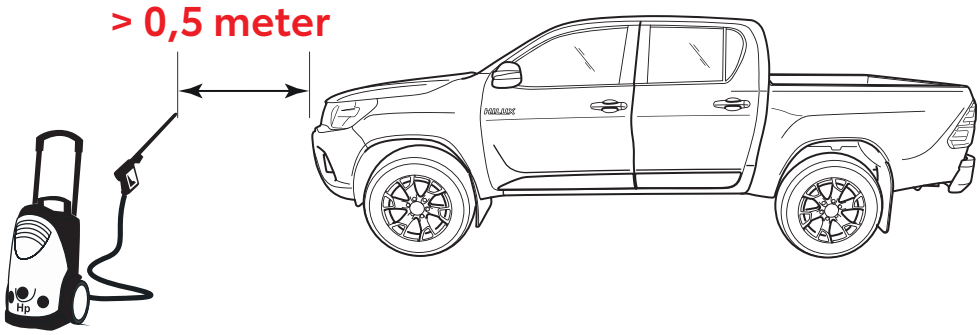
> 0,5 meter

CHECK SHEET

Model/Year: Hilux
As from 2020/05

Hood Deflector

VINn° ☐☐☐☐☐☐☐☐☐☐☐☐☐☐☐☐☐

DURING INSTALLATION

1

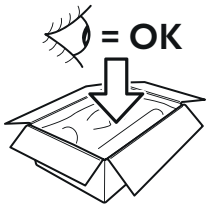

☐

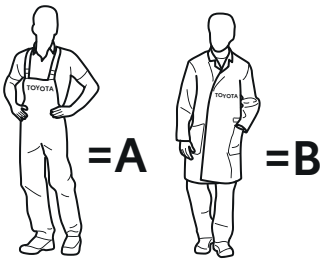

2



N° 1

Serial Number

☐

AFTER INSTALLATION

1



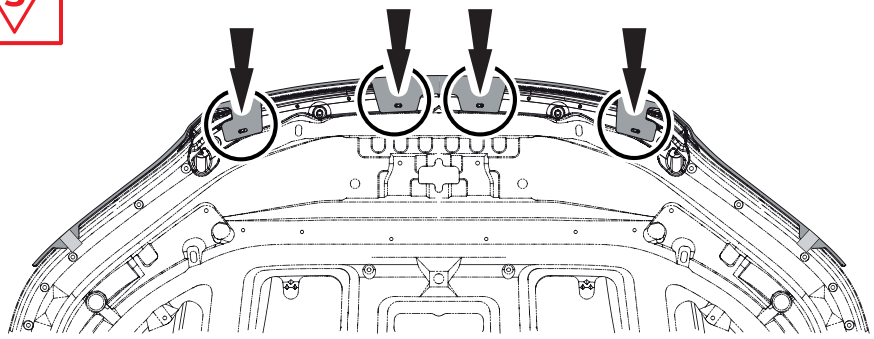



A B

4x 2 Nm ☐ ☐

2

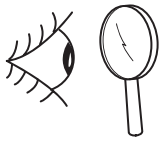

= OK

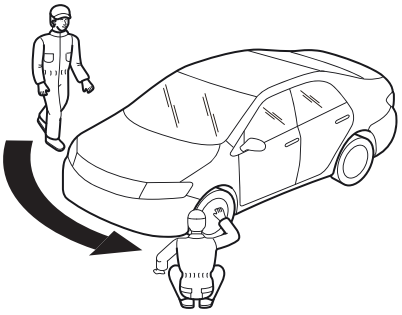

☐

Installation Date:	Technician Name & Signature:	Stamp:
. . / . . /		